SPARKS INDUSTRIES

92-.840	CUSTOMER NAME	92
PART NUMBER		DIE NUMBER

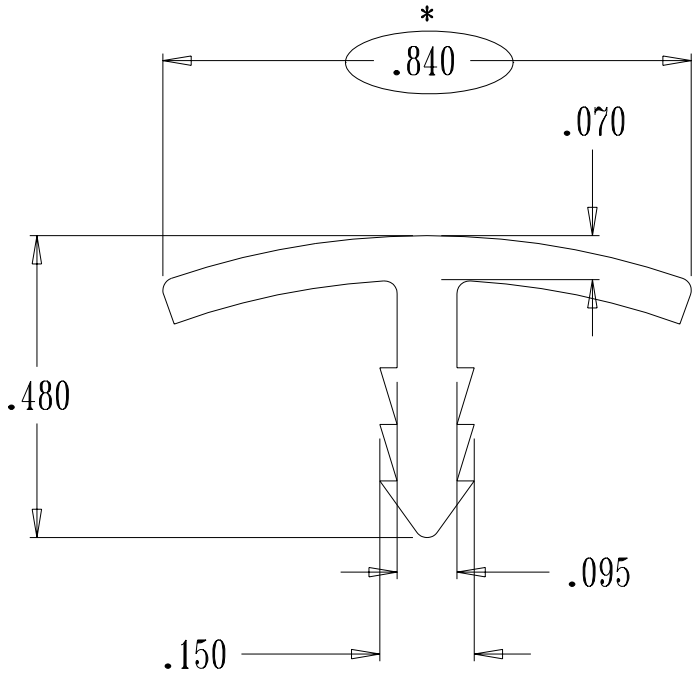

* *
NOTE:
ALL SIZES ARE
MINIMUM DIMENSIONS

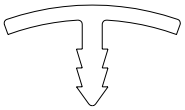

"ACTUAL SIZE"

*
"CRITICAL"
CIRCLED DIMENSION MUST
MATCH WITH MATING PART

DATE DRAWN:10-01-99		
JOB # 010604		
DATE:	REVISIONS	SCALE:3X
		AREA:.102
		WEIGHT:.061
		PERIM:2.756
		SOLID ☒
		HOLLOW ▭

SPARKS INDUSTRIES
404 NORTH COLUMBIA AVENUE SHEFFIELD AL. 35660
MAILING: PO BOX 638 SHEFFIELD AL. 35660
E-MAIL: info@sparksindustries.com
WEBSITE: www.sparksindustries.com
PHONE: 1-888-917-3963